HQ-0221

Shipped in packet-tape reel(5,000pcs per reel)

Notice : It is requested to read and accept "IMPORTANT NOTICE" written on the back of the front cover of this catalogue.

●Absolute Maximum Ratings

Item	Symbol	Limit	Unit
Max. Input Voltage	V_C	6	V
Max.Input Current	I_C	17	mA
Operating Temp. Range	Topr.	−40 ～ +125	℃
Storage Temp. Range	Tstg.	−40 ～ +150	℃

●Electrical Characteristics(T_a=25℃)

Item	Symbol	Conditions	Min.	Typ.	Max.	Unit
Output Hall Voltage	$V_{H(i)}$ ※2	B=50mT, V_C=3V	90		130	mV
Relative Output Voltage Ratio	V_{Hr} ※3	B=50mT, V_C=3V	95		105	%
Input Resistance	R_{in}	B=0mT, I_C=0.1mA	370		570	Ω
Output Resistance	$R_{out(i)}$	B=0mT, I_C=0.1mA	750		1150	Ω
Relative Resistance Ratio	R_{outr} ※4	B=0mT, I_C=0.1mA	95		105	%
Offset Voltage	$V_{OS}(V_u)$	B=0mT, V_C=3V	−6		+6	mV
Temp. Coefficient of V_H	αV_H ※5	B=50mT, V_C=3V Ta=25～125℃		−0.2		%/℃
Temp. Coefficient of R_{in}	αR_{in} ※6	B=0mT, I_C=0.1mA Ta=25～125℃		−0.2		%/℃

※2. $V_H = VHM - V_{os}(V_u)$ (VHM:meter indication)

※3. $V_{H(i)}$(i=1.2) is Hall output voltage of 2-Hall Elements of one package.
$V_{Hr\ min}=\min(V_{H(i)})/V_{Havg.}X100$, $V_{Hr\ max}=\max(V_{H(i)})/V_{Havg.}X100$
Where $V_{Havg.}=(V_{H(1)}+V_{H(2)})/2$

※4. $R_{out(i)}$(i=1.2) is output resistance of 2-Hall Elements of one package.
$R_{out\ r\ min}=\min(R_{out(i)})/R_{out\ avg.}X100$, $R_{out\ r\ max}=\max(R_{out(i)})/R_{out\ avg.}X100$
$R_{outavg}=(R_{out(1)}+R_{out(2)})/2$

※5. $\alpha V_H = \frac{1}{V_H(T_1)} \times \frac{V_H(T_2)-V_H(T_1)}{(T_2-T_1)} \times 100$

※6. $\alpha R_{in} = \frac{1}{R_{in}(T_1)} \times \frac{R_{in}(T_2)-R_{in}(T_1)}{(T_2-T_1)} \times 100$

T_1 = 25˚C, T_2 = 125˚C

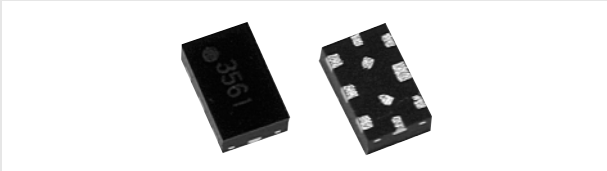

●Input Voltage Derating Curve

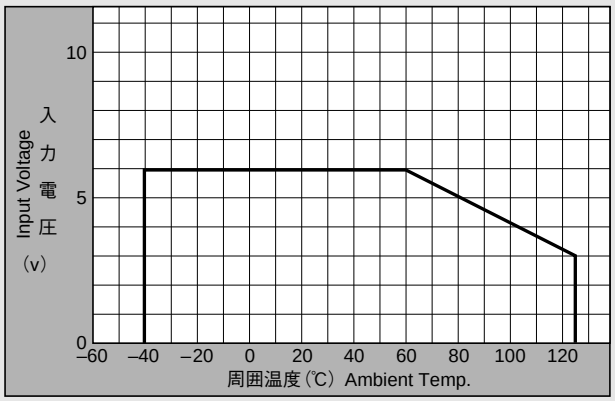

●Input Current Derating Curve

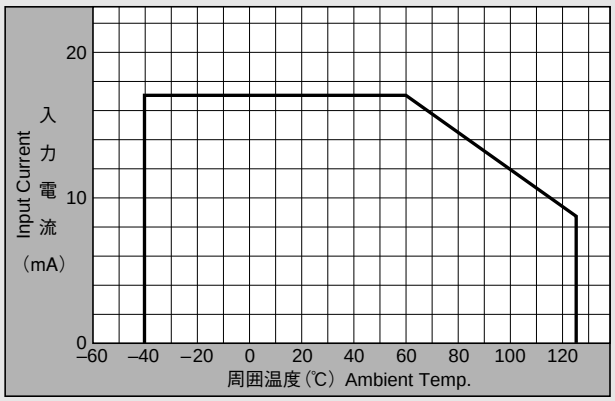

●Pinning

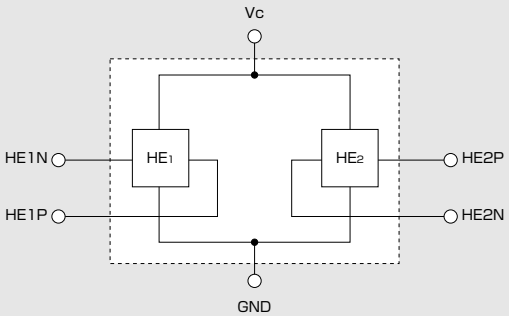

•Please be aware that our products are not intended for use in life support equipment, devices, or systems. Use of our products in such applications requires the advance written approval of our sales staff.
Certain applications using semiconductor devices may involve potential risks of personal injury, property damage, or loss of life. In order to minimize these risks, adequate design and operating safeguards should be provided by the customer to minimize inherent or procedural hazards. Inclusion of our products in such applications is understood to be fully at the risk of the customer using our devices or systems.

•Handling precautions required for preventing electrostatic discharge.

•This product contains galium arsenide（GaAs）.Handling and discarding precautions required.

●Dimensional Drawing(Unit : mm)

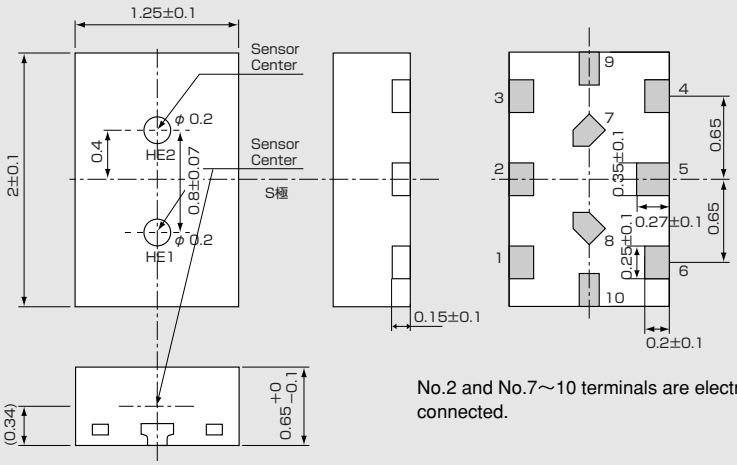

No.2 and No.7～10 terminals are electrically connected.

●Land pattern (for reference only) (Unit : mm)

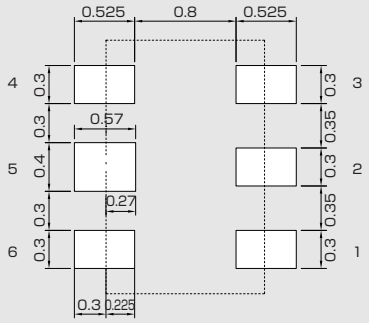

Pinning	
1:HE1P	4:HE2P
2:GND	5:Vc
3:HE2N	6:HE1N

●Characteristic Curves

R_{in}-T

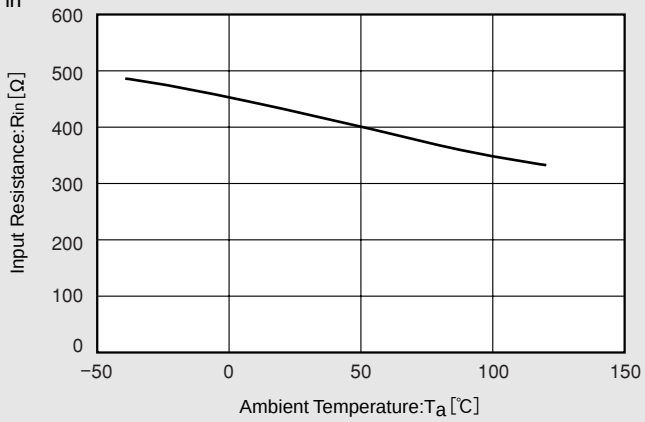

V_H-B

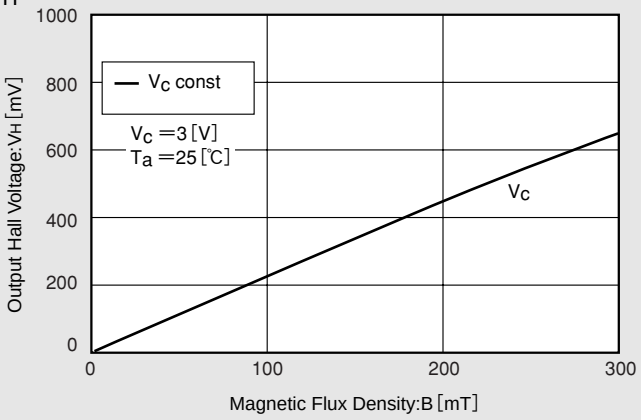

V_H-T

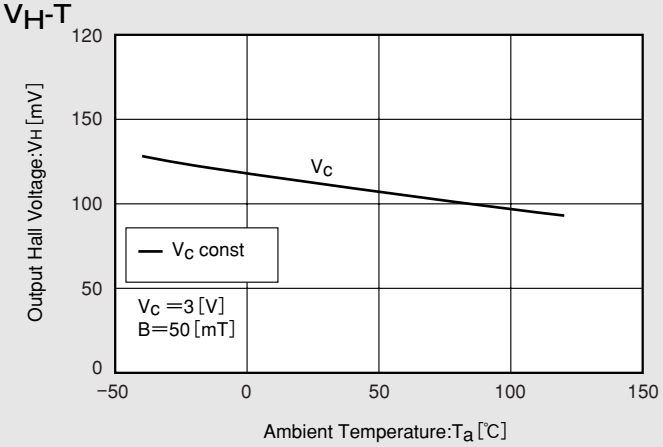

V_{os}(Vu)-T (For reference only)

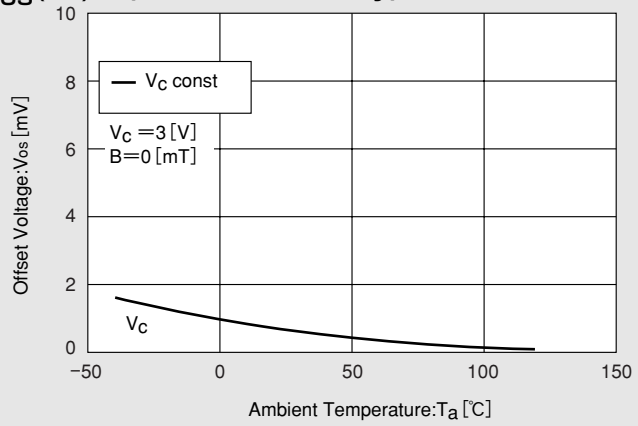

※Magnetic Flux Density
1 [mT] =10 [G]

in This Example:R_{in}=425〔Ω〕、V_{os}=0.8〔mV〕〔Vc=3〔V〕〕