PROPRIETARY

THIS DRAWING CONTAINS CONFIDENTIAL INFORMATION PROPRIETARY TO GMW INC. IT MUST NOT BE REPRODUCED OR DISCLOSED TO OTHERS OR USED IN ANY WAY, IN WHOLE OR IN PART EXCEPT AS AUTHORIZED IN WRITING BY GMW INC.

REVISION HISTORY

REV.	DESCRIPTION	DATE	APPROVED
A	Release.	18 Apr, 2018	T. King

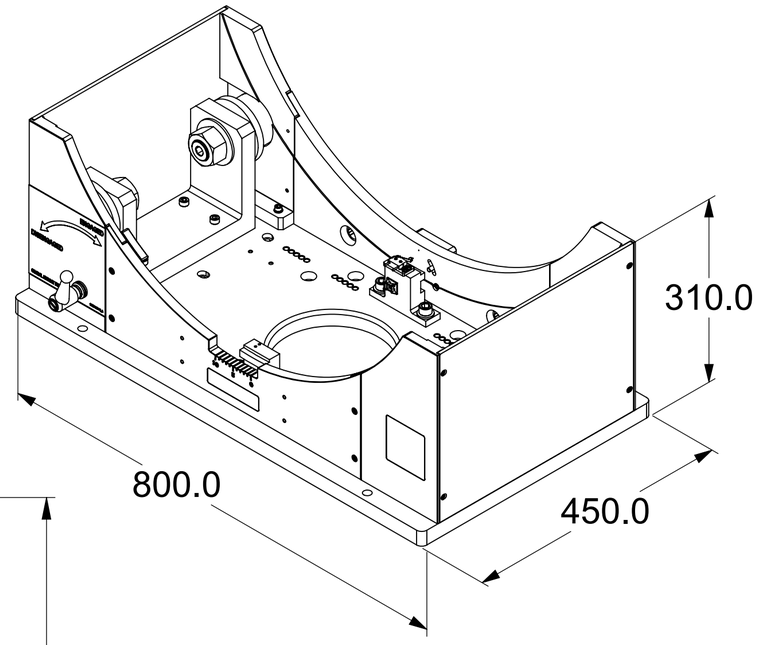

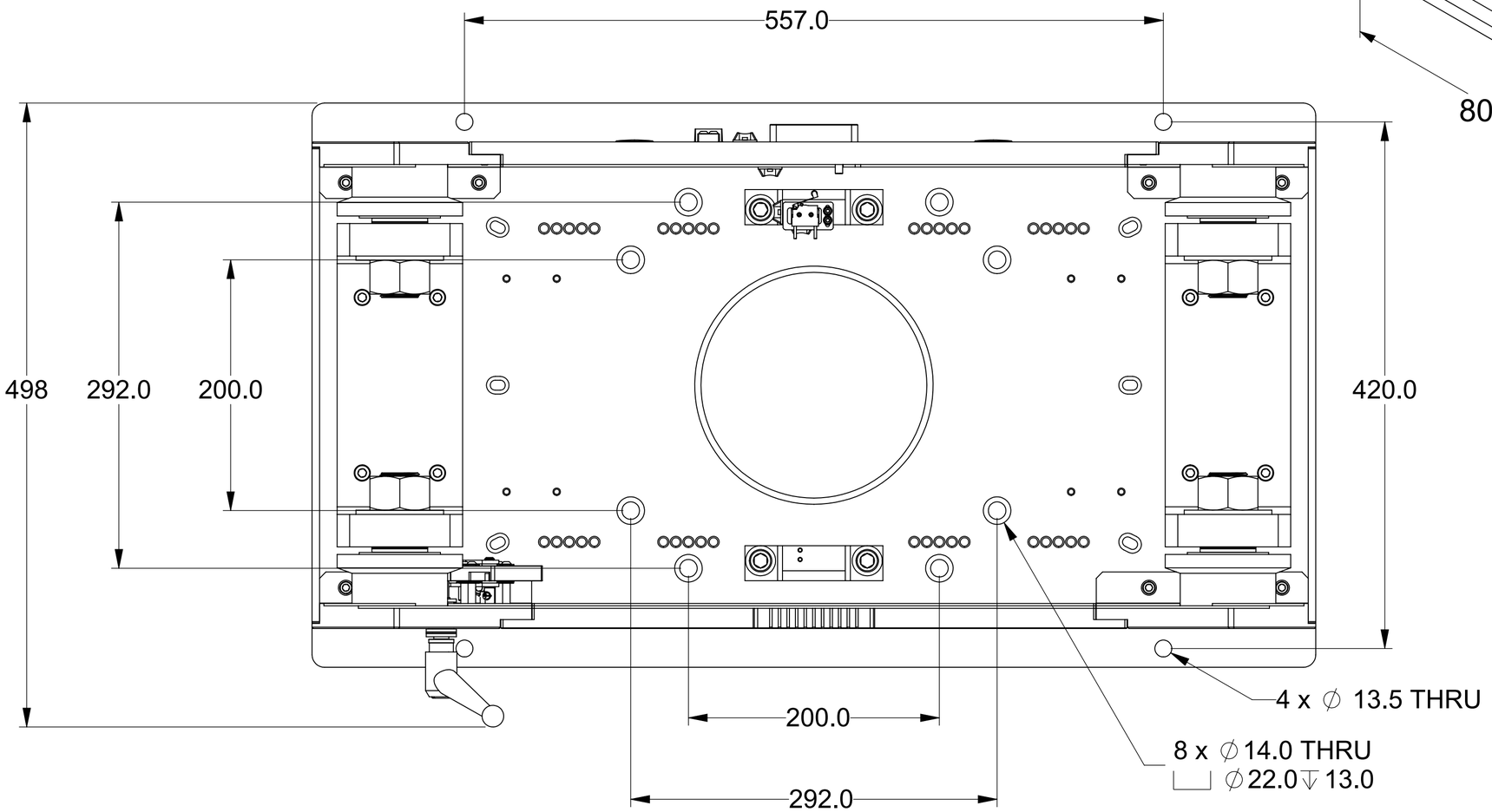

DRAWN K. Chappell	DATE 18 Apr, 2018	DO NOT SCALE FROM DRAWING	GMW Associates
CHECKED T. King	DATE 18 Apr. 2018		955 Industrial Road, San Carlos, CA 94070 Tel: (650) 802-8292. Fax: (650) 802-8298
ENGINEERING	DATE		TITLE: Gimbal Mount Basic Dimensions
			SIZE A2 · DWG NO. 11907-0363-1 · REV. A
			SCALE: 1:3 · MASS: 130 kg · SHEET: 1 OF 1