**Ultra-stable, high precision (ppm class) fluxgate technology DS Series current transducer for non-intrusive, isolated DC and AC current measurement up to 800A**

## Features

- Linearity error maximum 1.5 ppm
- Fluxgate, closed loop compensated technology with fixed excitation frequency and second harmonic zero flux detection for best in class accuracy and stability
- Industry standard DSUB 9 pin connection
- Green diode for normal operation indication
- Full aluminum body for superior EMI shielding and extended operating temperature range
- Large aperture ϕ28.1mm for cables and bus bars

## Applications:

- MPS for particles accelerators
- Gradient amplifiers for MRI devices
- Stable power supplies
- Precision drives
- Batteries testing and evaluation systems
- Power measurement and power analysis
- Current calibration purposes

| Specification highlights | Symbol | Unit | Min | Typ | Max |
|---|---|---|---|---|---|
| Nominal primary AC current | $I_{PN}$ AC | Arms | | | 500 |
| Nominal primary DC current | $I_{PN}$ DC | A | -750 | | 750 |
| Measuring range | $\hat{I}_{PM}$ | A | -800 | | 800 |
| Primary / secondary ratio | n1 : n2 | | 1:1750 | | 1:1750 |
| Linearity error | $\varepsilon_L$ | ppm | -1 | | 1 |
| Offset current (including earth field) | $I_{OE}$ | ppm | -10 | | 10 |
| DC-10Hz Overall accuracy @25°C (= $\varepsilon_L + I_{OE}$) | acc$\varepsilon$ | ppm | -11 | | 11 |
| AC Maximum gain error 10Hz to 2kHz | $\varepsilon$G | % | | | ±0.07 |
| Operating temperature range | Ta | °C | -40 | | 85 |
| Power supply voltages | Uc | V | ±14.25 | | ±15.75 |

All ppm (or %) values refer to nominal current

## Electrical specifications at Ta=23°C, supply voltage = ± 15V unless otherwise stated

| Parameter | Symbol | Unit | Min | Typ. | Max | Comment |
|---|---|---|---|---|---|---|
| Nominal primary AC current | $I_{PN}$ AC | Arms | | | 500 | Refer to fig. 1 & 2 for derating |
| Nominal primary DC current | $I_{PN}$ DC | A | -750 | | 750 | Refer to fig. 1 for derating |
| Measuring range | $I_{PM}$ | A | -800 | | 800 | Refer to fig. 1 & 2 for derating |
| Overload capacity | $\hat{I}_{OL}$ | A | | | 4500 | Non-measured, 100ms |
| Nominal secondary current | $I_{SN}$ | mA | -285.71 | | 285.714 | At nominal primary DC current |
| Primary / secondary ratio | | | 1:1750 | | 1:1750 | |
| Measuring resistance | $R_M$ | Ω | 0 | | 3 | Refer to fig. 1 for details |
| Linearity error | $\varepsilon_L$ | ppm<br>µA | -1<br>-0.29 | | 1<br>0.29 | ppm refers to nominal current<br>µA refers to secondary current |
| Offset current<br>(including earth field) | $I_{OE}$ | ppm<br>µA | -10<br>-2.86 | | 10<br>2.86 | ppm refers to nominal current<br>µA refers to secondary current |
| DC-10Hz Overall accuracy @25°C (= εL + IOE ) | accε | ppm | -11 | | 11 | ppm refers to nominal DC current |
| Offset temperature coefficient | $TC_{IOE}$ | ppm/K<br>µA/K | -0.1<br>-0.03 | | 0.1<br>0.03 | ppm refers to nominal current<br>µA refers to secondary current |
| Bandwidth | f(-3dB) | kHz | 300 | | | Small signal, graphs figure 3 |
| Amplitude error 10Hz –2kHz<br>2kHz -10kHz<br>10kHz - 100kHz | εG | % | | | 0.07%<br>0.30%<br>4.00% | % refers to nominal current |
| Phase shift 10Hz –2kHz<br>2kHz -10kHz<br>10kHz - 100kHz | θ | ° | | | 0.03°<br>0.04°<br>3.00° | |
| Response time to a step current IPN | tr @ 90% | µs | | 1 | | di/dt = 100A/µs |
| Noise 0 - 100Hz<br>0 - 1kHz<br>0 - 10kHz<br>0 - 100kHz | noise | ppm rms | | | 0.02<br>0.06<br>0.8<br>2.5 | Measured on secondary current |
| Fluxgate excitation frequency | $f_{Exc}$ | kHz | | 32.5 | | |
| Induced rms voltage on primary conductor | | µV rms | | | 5 | |
| Power supply voltages | Uc | V | ±14.25 | | ±15.75 | |
| Positive current consumption | Ips | mA | 93 | 97 | 104 | Add Is (if Is is positive) |
| Negative current consumption | Ins | mA | 85 | 91 | 96 | Add Is (if Is is negative) |
| Operating temperature range | Ta | °C | -40 | | 85 | |
| **Stability** | | | | | | |
| Offset stability over time | | ppm / month | -0.1<br>-0.03 | | 0.1<br>0.03 | ppm refers to nominal current<br>µA refers to secondary current |
| Offset change with vertical external magnetic field | | µA/mT | | 0.2 | 0.8 | (perpendicular to bus bar)<br>µA refers to secondary current |
| Offset change with horizontal external magnetic field | | µA/mT | | 0.8 | 2 | (parallel to bus bar)<br>µA refers to secondary current |
| Offset change with power supply voltage changes | | µA/V | | 0.004 | 0.04 | µA refers to secondary current |

## Measurement resistor RM and ambient temperature derating (Fig. 1)

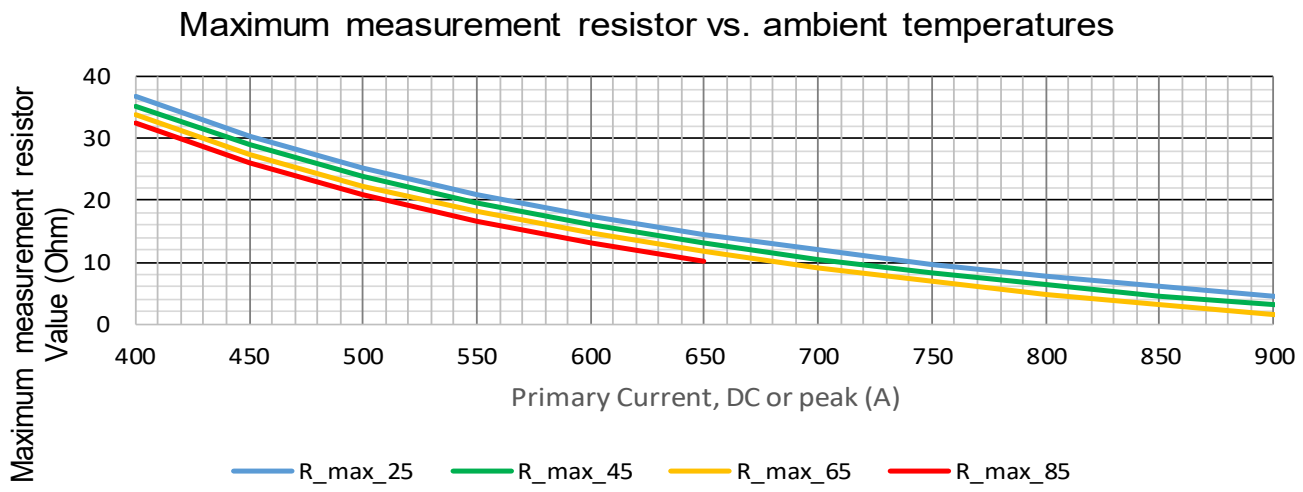


## Frequency and ambient temperature derating (Fig. 2)

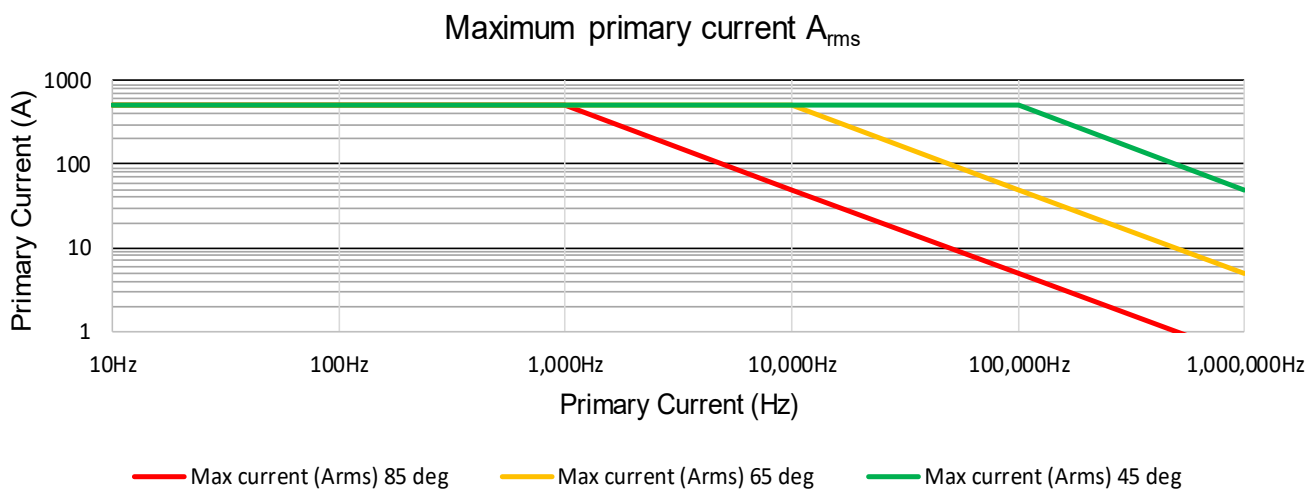


## Frequency characteristics (Fig. 3)

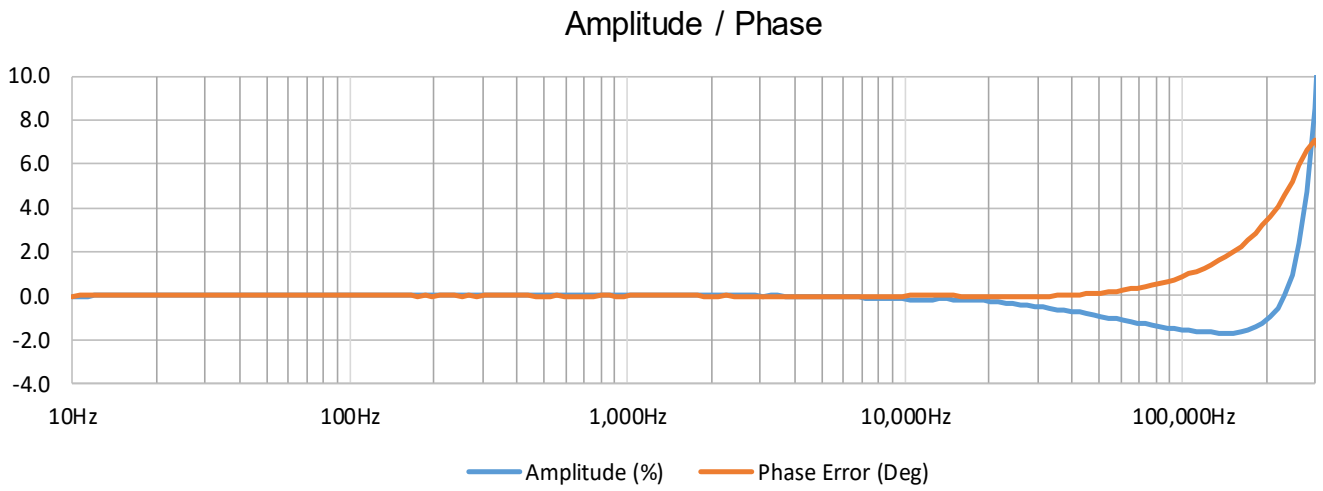

## Isolation specifications

| Parameter | Unit | Value |
|---|---|---|
| Clearance | mm | 9 |
| Creepage distance | mm | 10 |
| Comparative tracking index (CTI) | V | > 600 |
| Rms voltage for AC isolation test, 50/60 Hz, 1 min<br>- Between primary and (secondary and shield)<br>- Between secondary and shield | kV | 5.7<br>0.2 |
| Impulse withstand voltage (1.2/50µs) | kV | 10.4 |
| Rated rms isolation voltage<br>reinforced isolation, overvoltage category III, Pollution degree 2<br>according to<br>- IEC 61010-1<br>- EN50780 | V | 300<br>600 |

## Absolute maximum ratings

| Parameter | Unit | Max | Comment |
|---|---|---|---|
| Primary | kA | 4.5 | Maximum 100ms |
| Power supply | V | ±16.5 | |

## Environmental and mechanical characteristics

| Parameter | Unit | Min | Typ | Max | Comment |
|---|---|---|---|---|---|
| Ambient operating temperature range | °C | -40 | | 85 | |
| Storage temperature range | °C | -40 | | 85 | |
| Relative humidity | % | 20 | | 80 | Non-condensing |
| Mass | kg | | 0.6 | | |
| Connections | Power supplies: D-SUB 9 pins male | | | | |
| Standards | EN 61326-1 EMC<br>EN 61010-1:2010 Safety | | | | |

## Advanced Sensor Protection Circuits "ASPC"

Developed to protect the current transducer from typical fault conditions:

- Unit is un-powered and secondary circuit is open or closed
- Unit is powered and secondary circuit is open or interrupted

Both DC and AC primary current up to 100% of nominal value can be applied to the current transducers in the above situations without damage to the electronics.
Please notice that the sensor core can be magnetized in all above cases, leading to a small change in output offset current (less than 10ppm)

## Status pins

When transducer is operating in normal condition, the status pins (3 and 8) are shorted.

Status pins properties: - forward direction pin 8 to pin 3, maximum forward current 10mA
- maximum forward voltage 60V, maximum reverse voltage 5V

## Accessories

| | |
|---|---|
| • 4-channel power supplies unit for connection up to 4xDL2000 : | DSSIU-4 |
| • 6-channel power supplies unit for connection up to 6xDL2000 : | DSSIU-6 |
| • Transducer cables in 5 lengths (2m - 5m - 10m - 15m - 20m): | DSUB2 - DSUB5 - DSUB10 - DSUB15 - DSUB20 |
| • Transducer cable 3m for connection to end-user's power supply: (with access to current output via ϕ4 banana jacks) | Transducer cable for lab PS |

Please visit Danisense homepage for relevant datasheets

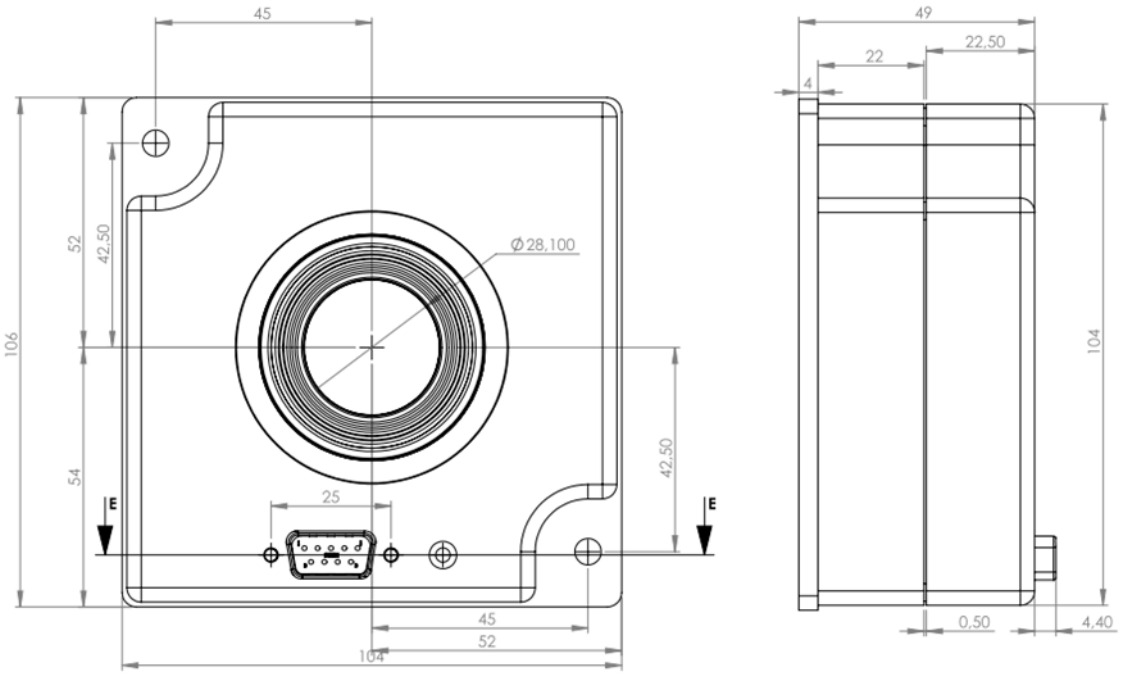


(general tolerance 0.3mm unless otherwise statd)

## DSUB pin layout

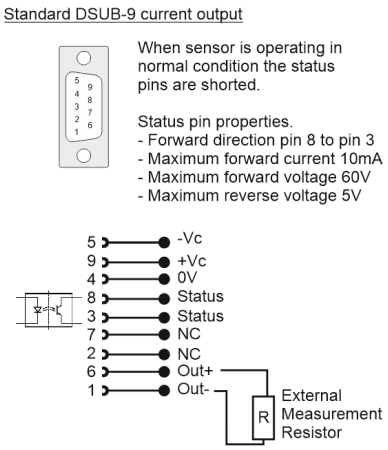


## Positive current direction

Is identified by an arrow on the transducer body