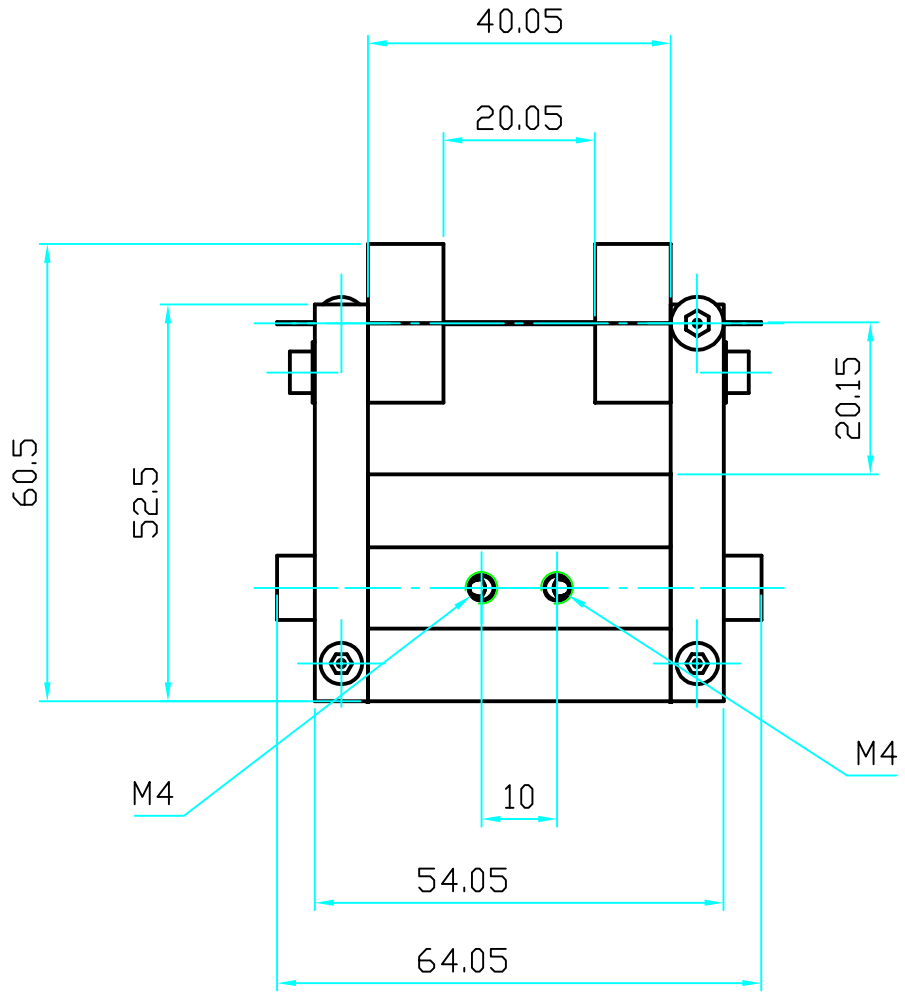

VWM-S-1W-A20mm