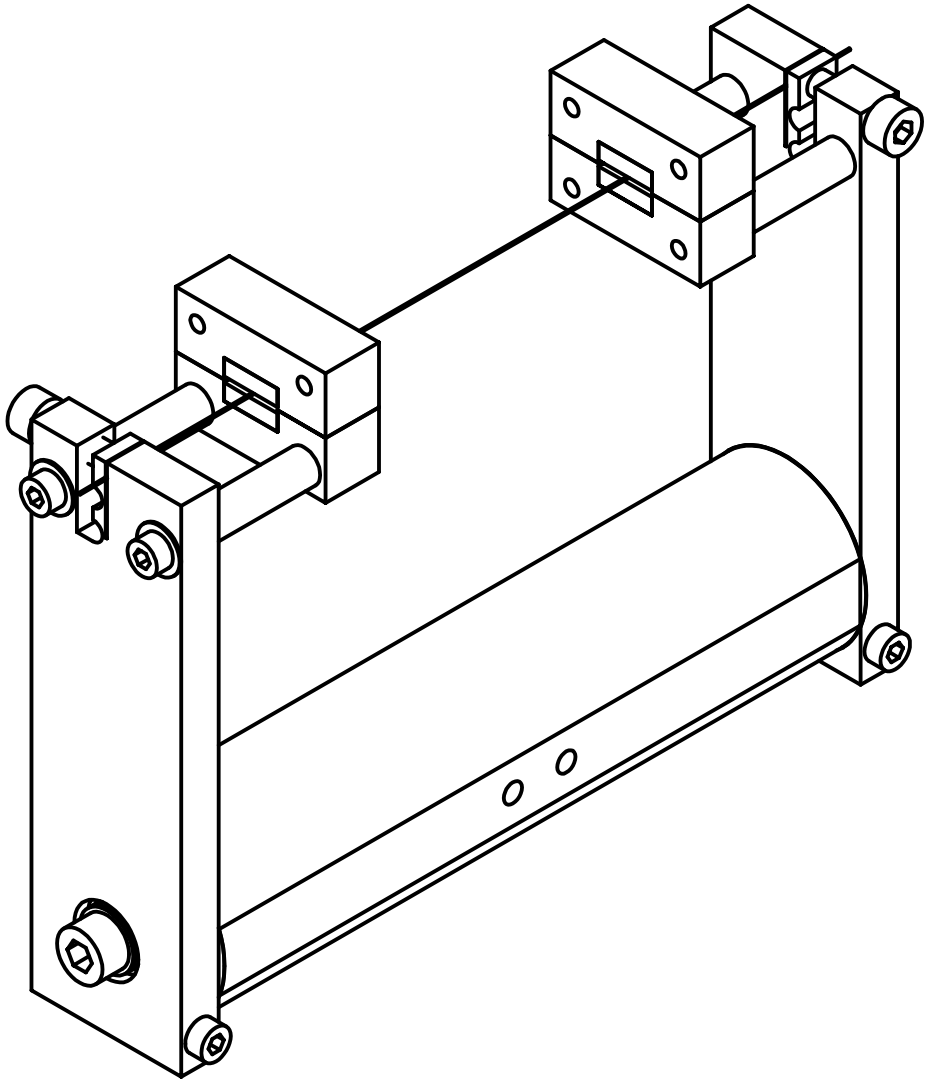

VWM-S-1W-A60mm