5207 Electromagnet

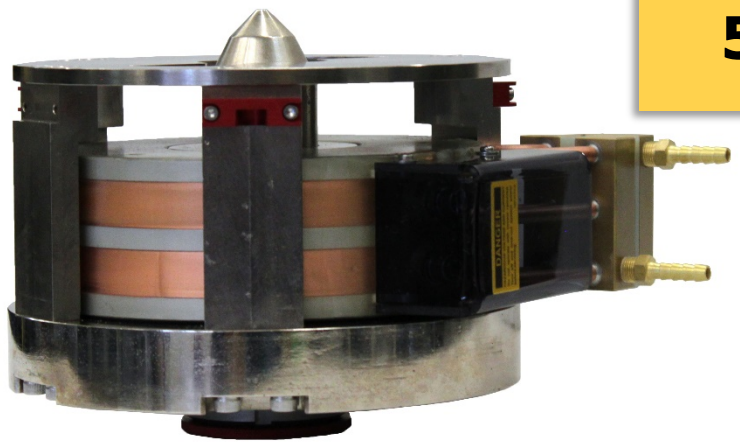

Features

- Up to 2T Projected Field
- Small and Modest Weight
- Any Mounting Orientation
- Fast Cycle Times

Applications

- MRAM Test
- Spintronic Devices
- Hall Effect Studies
- Magneto-Optical Studies

OVERVIEW

The **5207** is a system primarily designed for integration into probe stations for MRAM test. The location of the pole face can be adjusted precisely to be located relative to the DUT with high accuracy.

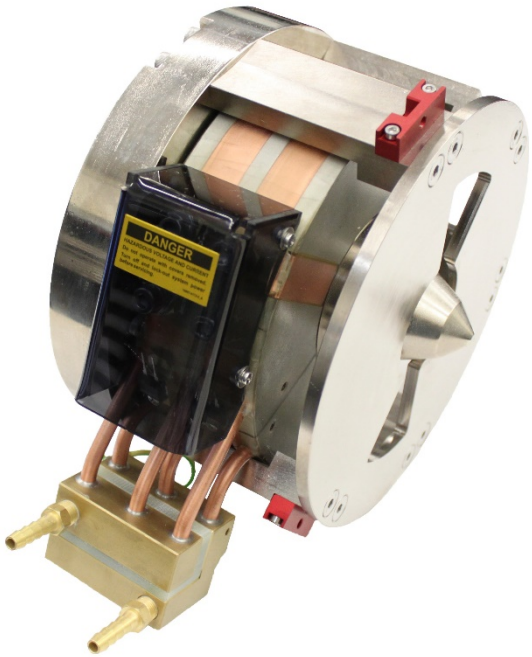

Revised November 15, 2022

GMW Associates

www.gmw.com
sales@gmw.com
+1-650-802-8292
955 Industrial Road
San Carlos, California, USA

Model 5207 General Specifications

Mechanical

Dimensions	196mm Main Diameter, 122mm from top plane to bottom plane 194mm from top of eye bolt to pole face. 160mm from red disc to pole face (eye bolt removed)
Weight	20kg
Standard Pole Face Diameter	5mm

Coils

Resistance (20°C)	0.730Ω
Max. Resistance (65°C)	0.888Ω
Low Current Inductance	0.104H
High Current Inductance	0.07H
Anticipate Max. Sinusoidal Frequency (1T)	10Hz

Air cooled in ambient 18°C

Max. Continuous Power	7A, 7V, 50W
Sinusoid	10Apeak, 9Vpeak
Triangle Wave	12Apeak, 11Vpeak

Water cooled at 2 Litre/min (supply 18°C @ 5 psi) 1/8”-1/4” hose barb fitting

Max. Continuous Power	35A, 31V, 1kW
Sinusoid	50Apeak, 45Vpeak,
Triangle Wave	60Apeak, 54Vpeak

Safety

Over Temperature Interlock	Selco 802L-065 thermostat, mounted onto each cooling plate, wired in series. Contacts below 65°C

Mounting Details

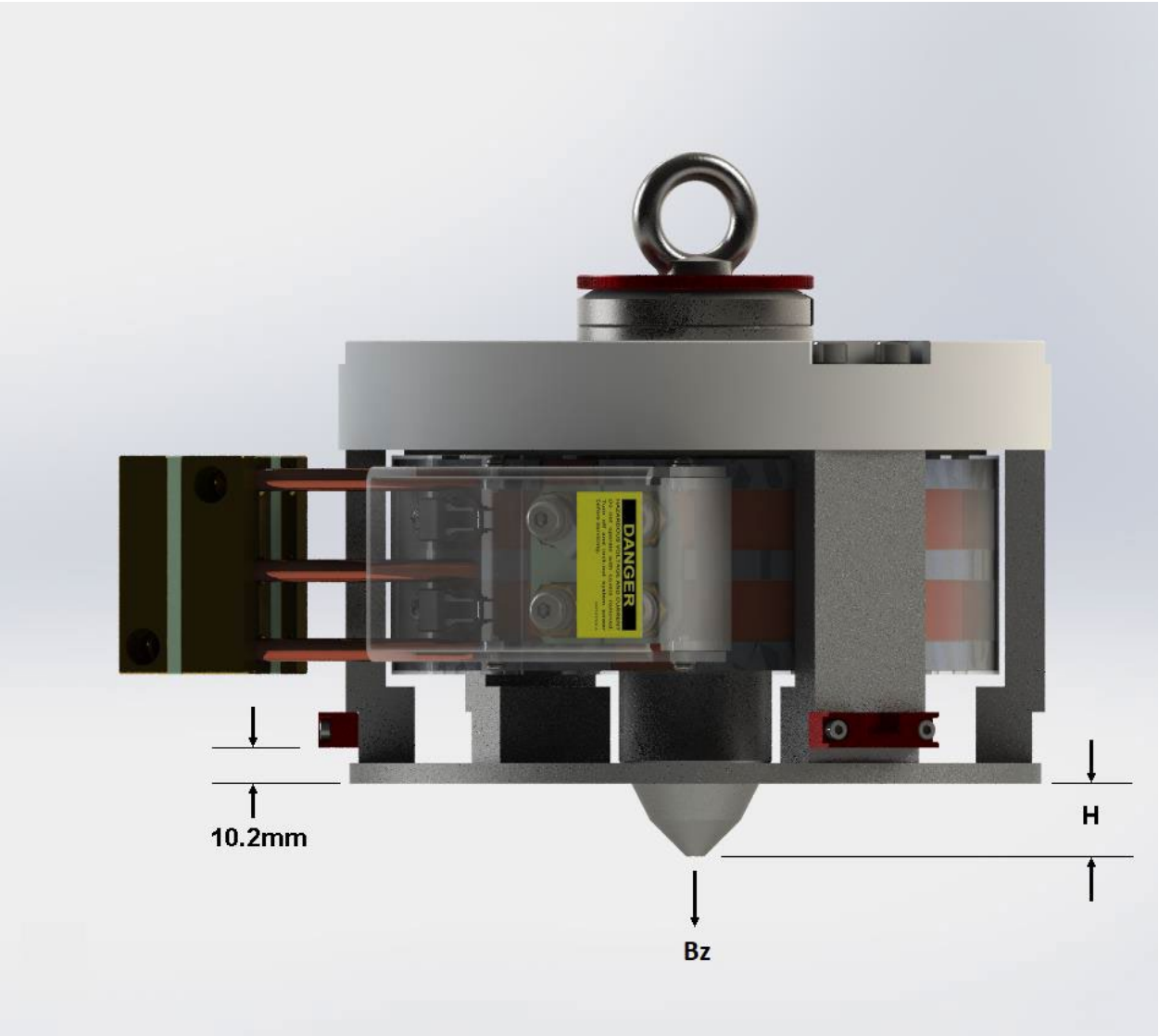

Note: H may be adjusted from +20mm to -10mm.

Performance at 35A excitation (series connected)

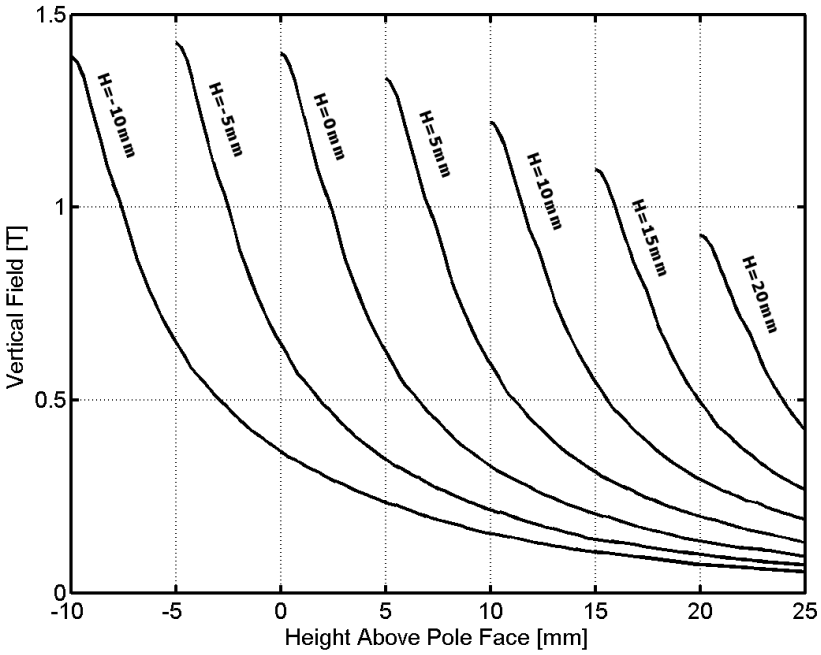

Vertical Bz field above the pole face for pole positions varied from H=-10mm to +20mm. Note that H=0mm corresponds to the pole face being flush with the bottom plane of the magnet.